BUILDING CODE
BOARD OF APPEALS
REGULAR MEETING AGENDA

500 W. Big Beaver
Troy, MI 48084
(248) 524-3344
www.troymi.gov
planning@troymi.gov

Theodore Dziurman, Chair; Gary Abitheira
Amanda Anderson, Brian Kischnick, Andrew Schuster

October 5, 2016 **3:00 PM** **COUNCIL BOARD ROOM**

1. ROLL CALL

2. APPROVAL OF MINUTES – September 7, 2016

3. HEARING OF CASES

   A. **VARIANCE REQUEST, CHRISTIAN E. TAZZIA FOR CONTROLLED POWER COMPANY, 1955 STEPHENSON** – A variance to install a stairway chair lift resulting in a 33.75 inch stairway width and a handrail on only one side of the stairway. Section 1009.4 requires a 44 inch minimum width and Section 1009.15 requires handrails on both sides.

   2012 MICHIGAN BUILDING CODE

4. COMMUNICATIONS

5. PUBLIC COMMENT

6. MISCELLANEOUS BUSINESS

7. ADJOURNMENT

NOTICE: *People with disabilities needing accommodations for effective participation in this meeting should contact the City Clerk by e-mail at clerk@troymi.gov or by calling (248) 524-3317 at least two working days in advance of the meeting. An attempt will be made to make reasonable accommodations.*

Acting Chair Abitheira called the Regular meeting of the Building Code Board of Appeals to order at 3:06 p.m. on September 7, 2016 in the Council Board Room of the Troy City Hall.

1. ROLL CALL

Members Present
Gary Abitheira
Amanda Anderson
Andrew Schuster

Members Absent
Theodore Dziurman, Chair
Brian Kischnick

Support Staff Present:
Mitch Grusnick, Building Official/Code Inspector
Allan Motzny, Assistant City Attorney
Kathy L. Czarnecki, Recording Secretary

Also Present:
Attached and made a part hereof is the signature sheet of those present and signed in at this meeting.

2. APPROVAL OF MINUTES

Moved by: Anderson
Support by: Schuster

RESOLVED, To approve the minutes of the August 3, 2016 Regular meeting as submitted.

Yes: All present (3)
Absent: Dziurman, Kischnick

MOTION CARRIED

3. HEARING OF CASES

A. **VARIANCE REQUEST, TERRY GLADSTONE FOR ACTION FENCE OF MICHIGAN, 2649 KENWYCK** – This property is a double front setback corner lot. As such it has required front setbacks from both Kenwyck and Danbury. The petitioner is requesting a variance to install a 6 foot high obscuring fence in the Danbury front setback, where City Fence Code limits fences to non-obscuring 30 inches high.

Mr. Grusnick reported the department received one written response to the public hearing notices and he had a verbal discussion with the homeowner at 4842 Danbury.

Present were the applicant Terry Gladstone and the property owner Nick Piersinski.

Mr. Piersinski said after talking with neighbors, they propose to reduce the fence height to 4 feet along Danbury and up to the front façade of the home at 4842 Danbury, then transition to a 6 foot high privacy fence on the back side. Mr. Piersinski said the fence would be a shadowbox-style obscuring fence. He circulated (1) a picture of the revised plan and (2) a letter signed by the property owners at 4842 Danbury stating their agreement with the revised plan.

Mr. Grusnick stated the application as revised would require a variance for the 4 foot high obscuring fence along Danbury and a variance would not be required for the privacy fence along the rear.

Acting Chair Abitheira opened the floor for public comment. Acknowledging there was no one present to speak, the floor was closed.

Moved by: Schuster
Support by: Anderson

RESOLVED, To grant the variance request subject to the modifications heard at this meeting, which is to install a 4 foot high obscuring fence along the Danbury property line at a minimum of 5 feet from the sidewalk, for the following reason:

1. The variance would not be contrary to the public interest or general purpose and intent of Chapter 83.

Yes: All present (3)
Absent: Dziurman, Kischnick

MOTION CARRIED

B. **VARIANCE REQUEST, KEVIN J. KMET FOR UNITED SHORE FINANCIAL SERVICES LLC, 1414 EAST MAPLE** – To allow the installation of 2 wall signs each measuring 262 square feet, where the Sign Code allows only 1 wall sign. Variances were previously granted to allow the 5 existing wall signs. The 2 signs will be removed within 6 months of installation.

Mr. Grusnick reported the department received no written responses to the public hearing notices.

Present to represent United Shore Financial Services were Kevin Kmet, Barbara Yolles and Laura Lawson.

Acting Chair Abitheira opened the floor for public comment. Acknowledging there was no one present to speak, the floor was closed.

Moved by: Anderson
Support by: Schuster

RESOLVED, To grant the variance request, for the following reasons:

1. The variance would not be contrary to the public interest or general purpose and intent of Chapter 85; and
2. The signs are temporary in nature.

Yes: All present (3)
Absent: Dziurman, Kischnick

MOTION CARRIED

C. **VARIANCE REQUEST, WARREN HUDSON FOR FRIEDMAN MANAGEMENT COMPANY, 700 TOWER** – A variance from the Sign Code to allow installation of a 554 square foot ground sign adjacent to the I-75 property line. The 2 existing ground signs will be retained. The Sign Code allows 2 ground signs. Ground signs are limited to a maximum size of 200 square feet.

Mr. Grusnick reported the department received no written responses to the public hearing notices. He clarified how the City determined the computation of the square footage of the sign.

Present were Warren Hudson and Stan Finsilver of Friedman Management Company. They addressed signage from the I-75 expressway, existing foliage and topography. The applicant was amicable to redesigning the base and thickness of the sign so that the overall square footage of the sign would be reduced.

Acting Chair Abitheira acknowledged there was no one present to speak.

Moved by: Abitheira
Support by: Anderson

RESOLVED, To grant a variance to allow a third ground sign adjacent to the I-75 property line, subject to a maximum size of 200 square feet, a maximum height of 25 feet and a minimum setback of 30 feet, for the following reasons:

1. The property is sided by three major roads.
2. The property is permitted to have three signs.

Yes: All present (3)
Absent: Dziurman, Kischnick

MOTION CARRIED

D. **VARIANCE REQUEST, WARREN HUDSON FOR FRIEDMAN MANAGEMENT COMPANY, 800 TOWER** – A variance from the Sign Code to allow installation of a 554 square foot ground sign adjacent to the I-75 property line. The 2 existing ground signs will be retained. The Sign Code allows 2 ground signs. Ground signs are limited to a maximum size of 200 square feet.

Mr. Grusnick reported the department received no written responses to the public hearing notices.

Present were Warren Hudson and Stan Finsilver of Friedman Management Company. They addressed limited locations to place the sign, existing foliage and topography. The applicants were amicable to placing the sign in an existing parking space.

Acting Chair Abitheira acknowledged there was no one present to speak.

Moved by: Abitheira
Support by: Schuster

RESOLVED, To grant a variance to allow a third ground sign adjacent to the I-75 property line, subject to a maximum size of 200 square feet, a maximum height of 25 feet and a minimum setback of 30 feet from the I-75 right of way, for the following reason:

1. The property is a double-fronted property.

Yes: All present (3)
Absent: Dziurman, Kischnick

MOTION CARRIED

4. COMMUNICATIONS

None.

5. PUBLIC COMMENT

None.

6. MISCELLANEOUS BUSINESS

None.

7. ADJOURNMENT

The Regular meeting of the Building Code Board of Appeals adjourned at 3:55 p.m.

Respectfully submitted,

Gary Abitheira, Acting Chair

Kathy L. Czarnecki, Recording Secretary

G:\Building Code Board of Appeals Minutes\2016\Draft\2016 09 07 Regular Meeting_Draft.doc

BUILDING CODE BOARD OF APPEALS SIGN-IN SHEET

September 7, 2016

NAME (PLEASE PRINT)	*ADDRESS*
Nick Pierscinski	2649 Kenwyck Dr. Troy, MI 48085
Kevin J. Kmiet	1414 ~~East~~ MAPLE RD. MI 48083
Barbara Yolles	"
Laura Lawson	"
Warren Hudson	34975 W. 12 mile, F. Hills
Stan finsilver	"
NAME (PLEASE PRINT)	*ADDRESS*

BUILDING CODE BOARD OF APPEALS MEETING SIGN-IN SHEET

September 7, 2016

3. HEARING OF CASES

A. **VARIANCE REQUEST, CHRISTIAN E. TAZZIA FOR CONTROLLED POWER COMPANY, 1955 STEPHENSON** – A variance to install a stairway chair lift resulting in a 33.75 inch stairway width and a handrail on only one side of the stairway. Section 1009.4 requires a 44 inch minimum width and Section 1009.15 requires handrails on both sides.

CONTROLLED POWER COMPANY

"World's recognized authority in power treatment"

POWER SALES NETWORK
1-800-521-4792
POWER INFORMATION CENTER
1-800-642-9624 FAX 1-800-642-9625

City of Troy Planning Department
Building Code Board of Appeals
500 West Big Beaver Road
Troy, Michigan 48084

Dear Building Code Board of Appeals Board,

We are looking for a variance so that we are able to have a commercial chair lift installed in our building and the company that we are purchasing the lift from and who is going to install it says that they need to apply for a State Elevator Permit. We were rejected for a building permit after a plan review back in May. The three options that were stated (ramp built to code, elevator or platform lifts) are not practical or cost effective.

We want to be a good and accommodating employer. The reason for this lift is to help a long term employee who works in the Engineering Department who works on the second floor who now has difficulty going up and down stairs.

The impact on the employees would be minimal. The impact for our long term employee would be significant. Enclosed is a drawing showing the layout of our building. The main stairs (in the middle) are where most of the daily foot traffic occurs. We have two other points of egress up to and from the second floor—the one back stairs which is located to the south of the main stairs and another back stairs located to the north of the main stairs. We want to have the chair lift installed on the back stairs located to the north of the main stairs. Controlled Power Company employees about 105 employees and there are approximately 10 employees who work on the entire second floor spread out from one end of the building to the other covering all three points of egress.

The sooner we can get approval for this project, the easier it will be for our employee. Thank you for your thoughtful consideration.

Sincerely,

Jeffrey J. Stumpf
Controller

1955 STEPHENSON HIGHWAY, TROY, MICHIGAN 48083 PHONE 1-248-528-3700 FAX 1-248-528-0411
Internet Address: http://www.controlledpwr.com

CITY OF TROY PLANNING DEPARTMENT
BUILDING CODE BOARD OF APPEALS APPLICATION

CITY OF TROY PLANNING DEPARTMENT
500 W. BIG BEAVER ROAD
TROY, MICHIGAN 48084
PHONE: 248-524-3364
E-MAIL: planning@troymi.gov

FEE $50

NOTICE TO THE APPLICANT

REGULAR MEETINGS OF THE BUILDING CODE BOARD OF APPEALS ARE HELD ON THE FIRST **WEDNESDAY OF EACH MONTH AT 3:00 P.M.** AT CITY HALL.

PLEASE FILE A COMPLETE APPLICATION, TOGETHER WITH THE APPROPRIATE FEE, **NOT LESS THAN TWENTY-SEVEN (27) DAYS** BEFORE THE MEETING DATE.

COMPLETE APPLICATIONS ARE PLACED ON THE NEXT AVAILABLE AGENDA OF THE BUILDING CODE BOARD OF APPEALS.

1. ADDRESS OF THE SUBJECT PROPERTY: 1955 Stephenson Highway, Troy, MI 48083

   ACREAGE PROPERTY: *Attach legal description if this an acreage parcel*

2. PROPERTY TAX IDENTIFICATION NUMBER(S): 88-20-26-351-019

3. CODE NAME (e.g. "BUILDING CODE", "SIGN CODE", "FENCE CODE") AND SECTION(S) RELATED TO THE APPEAL:

   Building Code

4. REASONS FOR APPEAL/VARIANCE: *On a separate sheet, please describe the reasons justifying the requested action. See Submittal Checklist.*

5. HAVE THERE BEEN ANY PREVIOUS APPEALS INVOLVING THIS PROPERTY? YES ☐ NO ☐

   Unsure ☒

6. APPLICANT INFORMATION:

NAME Christian E. Tazzia

COMPANY Controlled Power Company

ADDRESS 1955 Stephenson Highway

CITY Troy STATE MI ZIP 48083

TELEPHONE 248-528-3700 x5238

E-MAIL ctazzia@controlledpwr.com

7. APPLICANT'S AFFILIATION TO THE PROPERTY OWNER: Tenant

8. OWNER OF SUBJECT PROPERTY:

NAME Christian E. Tazzia

COMPANY Kalvel Investments, LLC

ADDRESS 1955 Stephenson Highway

CITY Troy STATE MI ZIP 48083

TELEPHONE 248-528-3700 x5238

E-MAIL ctazzia@controlledpwr.com

The undersigned hereby declare(s) under penalty of perjury that the contents of this application are true to the best of my (our) knowledge, information and belief.

The applicant accepts all responsibility for all of the measurements and dimensions contained within this application, attachments and/or plans, and the applicant releases the City of Troy and its employees, officers, and consultants from any responsibility or liability with respect thereto.

I, Christian E. Tazzia (PROPERTY OWNER), HEREBY DEPOSE AND SAY THAT ALL THE ABOVE STATEMENTS AND STATEMENTS CONTAINED IN THE INFORMATION SUBMITTED ARE TRUE AND CORRECT AND GIVE PERMISSION FOR THE BOARD MEMBERS AND CITY STAFF TO CONDUCT A SITE VISIT TO ASCERTAIN PRESENT CONDITIONS.

SIGNATURE OF APPLICANT _____ DATE 7/15/2016

PRINT NAME: Christian E. Tazzia

SIGNATURE OF PROPERTY OWNER _____ DATE 7/15/2016

PRINT NAME: Christian E. Tazzia

Failure of the applicant or his/her authorized representative to appear before the Board, as scheduled, shall be justifiable cause for denial or dismissal of the case with no refund of appeal fee(s). If the person appearing before the Board is not the applicant or property owner, signed permission must be presented to the Board.

The applicant will be notified of the time and date of the hearing by electronic mail.

Troy MICHIGAN
Building Inspection Department

May 20, 2016

Jeffrey J Stumpf
1955 Stephenson Hwy
Troy, MI 48083

Subject: Plan Review – 1955 Stephenson Hwy

Dear Applicant:

The design documents submitted for this project have been reviewed for compliance with the state adopted codes for building, plumbing, mechanical and electrical. The engineering review has been or will be conducted by the city staff and covered under a separate review letter. The **following comments must be addressed before a building permit is issued.**

Codes Currently in Effect (Statewide)
2012 Michigan Building Code, MBC 2012
2012 Michigan Mechanical Code, MMC 2012
2012 Michigan Plumbing Code, MPC 2012
2014 National Electrical Code w/state amendments, NEC 2014
Accessibility: Michigan Barrier Free Design Law, P.A. 1966 as amended and the 2003 ICC/ANSI A117.1 standard as referenced from Chapter 11of the 2012 Michigan Building Code.

Disclosure and Limitation of Reviews
This review and recommendation for approval does not relieve the owner or their representatives from complying with other codes, ordinances and other federal, state and county reviews, approvals, permits and inspections.

Building Plan Review, by Rick Kessler, Plan Examiner, 248.524.3367

1. Your request to install a chair lift in the existing stairway is not approved. The minimum required width of the stairway is 44" and it is required to have handrails on both sides.
2. There are 3 approved materials for accessibility to raised platforms and stories.
   - Ramp built to code.
   - Elevator.
   - Platform lifts.
3. Your proposal would require another stairway dedicated to the chair lift along with a Building Code Board of Appeals approval (application attached).

For processing:

- Please submit **revised construction documents** containing the requested information or plan revisions with ***all revisions clouded or otherwise identified.***

- **Please respond in writing to each comment by marking the attached list or creating a response letter.** Indicate which plan sheet, detail, specification, or calculation shows the requested information. Please send revisions to the attention of the plans examiner with the

Troy MICHIGAN
Building Inspection Department

building permit application number noted to the City of Troy. NOTE: All plan review responses and questions shall be directed to the person who did the review as noted below.

Please call or email me if you have any questions regarding this review.

Sincerely,

City of Troy / SAFEbuilt Inc

Rick Kessler
Plan Examiner

City of Troy Building Department
500 W. Big Beaver
Troy, MI 48084
248 524-3367 direct
R.Kessler@troymi.gov

SAFEbuilt Inc.

Richard Kessler
City of Troy
Building Department
500 West Big Beaver Road
Troy, MI 48084

Dear Mr. Kessler,

We are looking to install a commercial chair lift in our building and the company that we are purchasing the lift from and who is going to install it says that they need to apply for a State Elevator Permit and that we need a letter from the City of Troy (on letterhead) stating that the remaining 33.75 inch in the folded position from the existing 49 inch wide stair is acceptable egress.

I have attached their proposal, an example letter from Waterford Township along with the plans for review. The sooner that we can get the letter, the better as we are installing this lift to accommodate a long term employee who works in the Engineering Department on the second floor.

If I can be of any further assistance or if you have any questions, please give me a call.

Sincerely,

Jeffrey J. Stumpf
Controller
248-729-5264 direct dial

Jan. 13. 2014 4:32PM Handicare No. 5540 P. 3

STERLING 1000 STAIRLIFT TECHNICAL SPECIFICATIONS

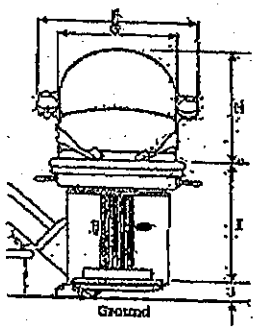

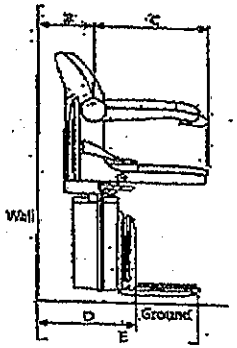

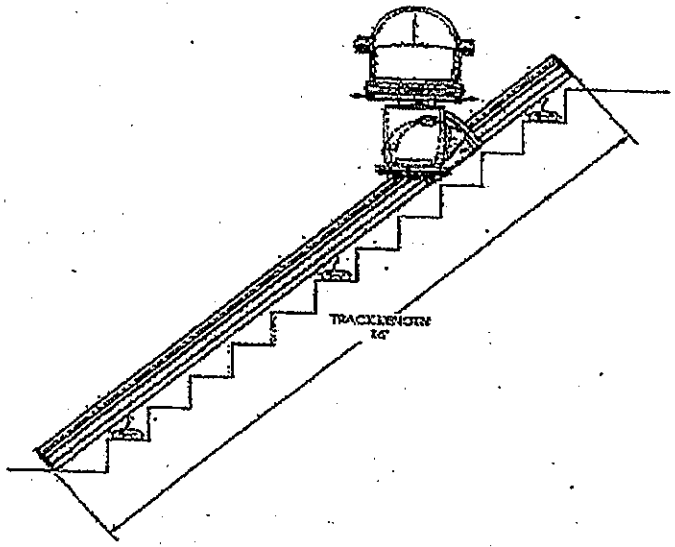

B Seat to wall back	5¾" / 146mm
C Seat depth	15¾" / 400mm
D Min folded width to footplate	15¼ / 387mm
E Min open width to footplate	26½" / 673mm
F Arm width external	23½" / 597mm
G Arm width internal	17¼" / 438mm
H Seat back height	16½ "/ 419mm
I Footplate to seat height	18-22½" / 457-572mm
J Min footplate height	3" / 76mm
Min track intrusion into stairs	5½" / 140mm
Min track intrusion into landing	3½" / 89mm (typical at 45°)
Weight capacity	302lb / 137kg
Weight capacity with heavy duty kit	350lb / 159kg
Speed	5" / 127mm per sec
Power supply	24v DC battery
Charger	110v
Maximum staircase angle	56°

COMPLIES WITH ASME 18.1 2008

- Handicare 1000's slim aluminum track with a hidden rack is stable, secure and fabricated to fit your home.
- Choose from six attractive upholstery colors to match the Handicare 1000 to your home's interior. The upholstery is also cleans easily and is flame-retardant.
- Adjust the seat to match your height for a comfortable ride.
- The rack and pinion drive ensures a smooth and quiet ride.
- A certified engineer installs your stairlift quickly and cleanly. In most homes, the work only takes a few hours and you can use your lift the same day.
- The Handicare 1000 is battery powered so you will never be stranded during a power outage.
- If you have difficulty bending at the hip or knee, choose the optional perch seat.
- Overcome the challenge of outdoor installation with the Handicare 1000 Outdoor™. This UV-protected, weatherproof stairlift has a water-proof cover so it is always dry and ready.
- The larger Handicare 1000 XL™ and 1000 XXL™ stairlifts with powered swivel seats are designed for passengers between 353 and 440 lb. – the greatest maximum capacity on the market.
- The Handicare 1000 is energy efficient – it only uses about $7 of power in a year.

The Handicare 1000 has safety sensors on the power pack and footplate.

These sensors are designed to stop the lift if it meets any obstruction. Once stopped it can only move in the opposite direction to the obstruction to allow for removal.

In addition, all Handicare stairlifts have a diagnostic display so that you can monitor the status of your stairlift, for example if a safety edge has been activated.

The easy release retractable seat belt is a standard safety feature that can be fastened on either side of the seat, or centred, whichever is easier for the user.

The Handicare 1000 also has an easily accessible key switch that allows you to disable the lift and prevent unauthorized use. So you don't need to worry about unsupervised children playing with your stairlift.

The Handicare 1000 is operated by pressing or holding the large toggle switch in the direction of travel.

Located at the end of the armrest, the switch can be fitted on either arm and is easy to use, even for those with conditions such as arthritis.

Curved rail	✓	X	X	The rail has a constant curvature and is designed to follow the contours of the staircase.
Wrap around rail	X	O	O	The rail has sections on either or both sides of the flight of stairs.
Retractable seat belt	X	✓	✓	The retractable belt can be clipped together on either side of the seat.
Choice of upholstery color	X	✓	✓	A selection of six colors allows you to choose an upholstery to match your décor.
Powered swivel	X	O	O	The chair is turned by the stairlift motor to give ease and safety of entering and exiting as required.
Stairarm	O	X	X	The chair is built to be used for particularly narrow staircases.
Floor swivel	X	X	O	Ideal for users who have difficulty bending at the hip or knee joint.
Outdoor version	X	X	O	Designed for use outside, with a UV protection for safety.

Manual	✓	✓	✓	The footplate is folded and unfolded manually.
Powered footplate	X	O	O	Folds and unfolds automatically when the chair is folded up.
Powered footplate	X	O	O	The footplate can be folded and lowered by a switch and so it does not rely on the user to operate.

Programmable stopping and parking	X	X	X	Parks automatically at the exact floor where the user is normally required to get off or on.
Charge system in track	✓	✓	X	Your lift charges when not in use, ready for the next journey.
Multiple charging points	X	X	✓	Use your remote control to park or charge points.
Park automatically after every use	X	X	X	Chair returns to the charging point after every use.
Easy track extension kit	O	X	X	Extend your track as your needs change.
Manual fold	O	O	O	Fold up when not in use, ideal for the top of the stairs where the chair will be stored by the user.
Powered fold	X	X	O	Automatically folds up when not in use, ideal for the top of the stairs where the chair will be stored by the user.
Side track	O	O	X	Automatically moves the track when the stairlift moves, saving space when not in use.

✓ Available as standard O Available as option X Not available

Available Colors:

Are Your Stairs a Challenge?

Do you or someone you love have difficulty going up and down the stairs? Are you concerned about safety?

You are not alone. Every year, thousands of people look for a solution to the problems posed by the difficulty they have using the staircase in their home.

You don't have to be at risk. The decision to install a stairlift is sometimes a difficult one, but when compared to the alternatives of moving or limiting access to one level of your home, it is many times the preferred solution.

You don't have to worry. A Handicare stairlift offers you a safe and reliable solution. Our team of experts have assisted thousands of people in overcoming problems posed by going up and down their stairs. We have many models of lifts to accommodate your needs, and a certified engineer will install your stairlift usually in a couple of hours. So you will have the safety and comfort you need to keep your independence and live in your home free from worry.

"I was concerned for the safety of my sons who lives alone and has trouble climbing the stairs. After installing a stairlift and seeing how easy it is to use we back now have peace of mind."

Unless you know someone who is already benefiting from using a stairlift, you may be a little unsure of what is involved in owning and using one.

Every stairlift has three basic components. The track is fitted to your staircase, not the wall as is commonly thought, and a power pack (the drive unit) is fitted to the track. Then the seat that most fits your needs is fitted to the power pack.

Stairlift tracks fall into two basic categories: straight and curved. Straight stairlifts are suitable for use where a stairlift only needs to travel in one straight line.

The Handicare 1000 stairlift offers one of the slimmest straight stairlift tracks on the market.

The sleek aluminum track has a hidden gear rack which offers two park points for battery charging and the XXL seat boasts our heaviest weight capacity for extra large comfort.

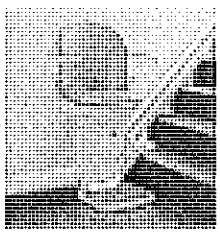

When you reach the top of the stairs you will need to swivel your seat around so that you exit onto the landing safely.

Manual swivel
If you have the manual swivel you will find a handle at either side of the seat. By pressing either handle down, or pulling it up, you can swivel the seat around to face the landing, where it will lock in place, allowing you to step off.

Powered Swivel
If you choose the powered swivel option the swivel is operated by continuing to hold the toggle when you arrive at the top of the stairs. The seat will automatically move while the toggle is activated. Our powered swivels have a manual override for emergency release to improve stairway access if required.

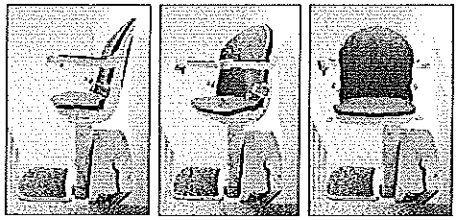

The footplate and seat can be folded up to increase available space leaving the staircase as clear as possible for other users.

Manual Footplate
Lifted and lowered by hand, manual footplates are fitted with an easy fold mechanism that minimizes the strength required to fold the footplate up or down.

Powered Footplate
If you choose the powered footplate option it will remove the need for you to bend down to fold or unfold the footplate. You can choose to have a footplate that folds automatically when the seat is folded and unfolded, or that is operated separately to the seat by a switch in the seat arm so you can raise and lower the footplate while seated.

The Handicare 1000 comes with two remote controls so you can have one upstairs and one downstairs. This means you can send your stairlift up and down the track without having to sit on it.

Use your remote control to park your stairlift on the charging points at the top or bottom of the stairs. Plus it is ideal for multi-user situations where a user can call the stairlifts between levels, just like an elevator.

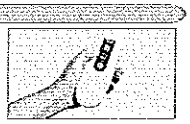

In order for the seat to get low enough for the user to sit, it is necessary for the track to extend beyond the staircase to the floor. Sometimes a doorway may be close to the bottom of the stairs and the track may intrude across it. In these circumstances a hinged track should be fitted. This means that the track can be folded away from the doorway giving clear access.

Manual Hinge
The Handicare 1000 is available with a manual hinged track. You will need to raise and lower the track manually. However, the gas strut assisted hinge is designed to make the manual operation as easy as possible.

Powered Hinge
As an upgrade, the Handicare 1000 is also available with an automatic hinged track. When operating the stairlift from the toggle, the hinge will lift/lower automatically.

When the stairlift is not in use the hinge is folded by holding a button on the remote control which means you do not need to move the track yourself. When the button is pressed your stairlift moves up the track and parks the hinge section then moves automatically leaving the doorway clear.

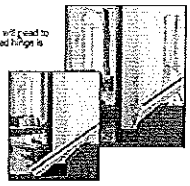

1000 XXL

The Handicare 1000 XXL offers the same features of the 1000 plus these extra benefits:

- A safe working load of up to 440 lbs, the highest available in the market.
- Central swivel - improved center of gravity
- Double arm spacers that increase the width between the arms of the seat from 22" to 28".
- XXL belt with velcro on either end to hold it firmly in place.
- Extended seat base that extends the depth from 14" to 17".
- Powered swivel as standard makes turning the stairlift seat as easy as possible.

Perch Seats

If you have difficulty sitting or have a tight staircase, a perch seat may be the solution.

With a perch seat you are in an almost standing position when you are using the lift. There is a shortened seat and retractable seat belt which provide a stable support area for users to "perch" on.

Upholstery is available in your choice of six colors.

BOARD OF TRUSTEES
Gary Wall, Supervisor
Sue Camilleri, Clerk
Margaret Birch, Treasurer
Anthony M. Bartolotta, Trustee
Julie Brown, Trustee
Karen Joliat, Trustee
Donna F. Kelley, Trustee

WATERFORD TOWNSHIP
5200 Civic Center Drive
Waterford, Michigan 48329-3773
Telephone: (248) 674-6238 Fax: (248) 674-4097
www.twp.waterford.mi.us

DEVELOPMENT SERVICES DEPARTMENT
Douglas W. Bradley, P.E.
Director
Brent A. Gibson
Ass't. Director of Building
Robert A. Merinsky, P.E.
Ass't Director of Engineering
Larry R. Lockwood
Planning Division Head

June 18, 2014

Paul Olen
Olenco, Inc.
1465 Combermere
Troy, MI. 48083

Re: 1132 Voorheis, Waterford, MI 48328

Mr. Olen,

A recent review regarding the installation of the Sterling 1000 commercial stairway lift has shown that the proposed installation in the back south stair case, from the ground to upper level, of the Dr. Armstrong office building is a proper installation application for this piece of equipment in the proposed staircase. The 23 1/4 inches of egress when the lift is in the folded position is acceptable.

Sincerely,

Brent Gibson
Asst. Director
Waterford Township
Development Services

INGRESS / EGRESS
POINTS
FOR THE SECOND LEVEL

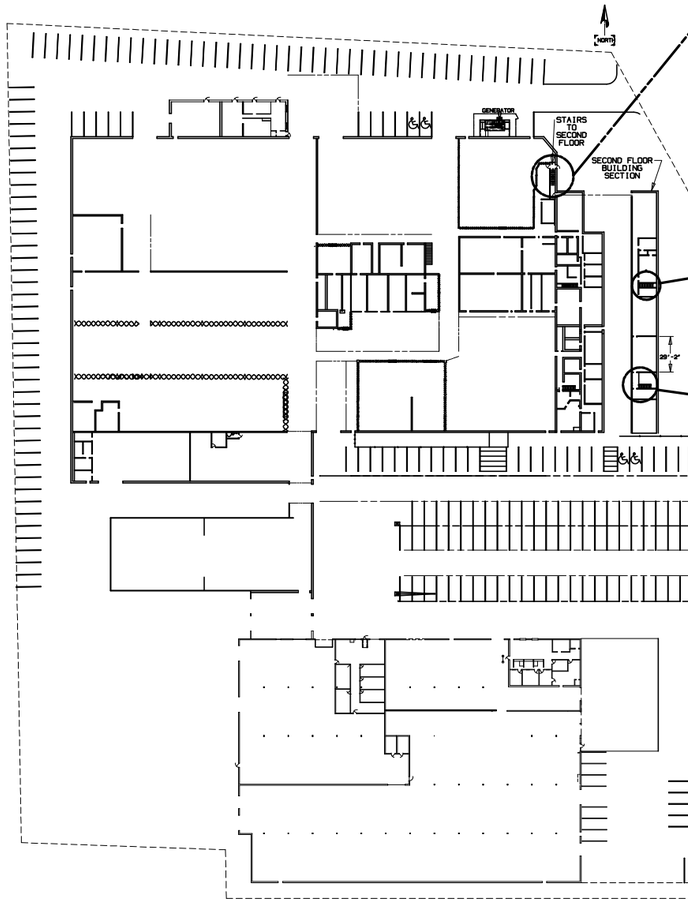

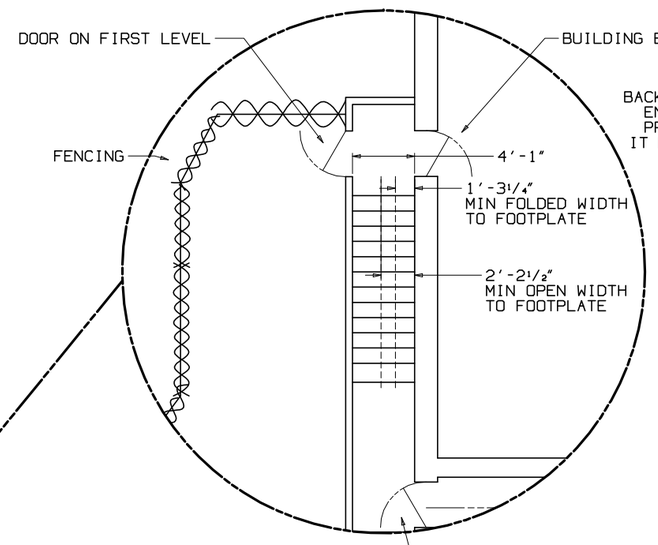

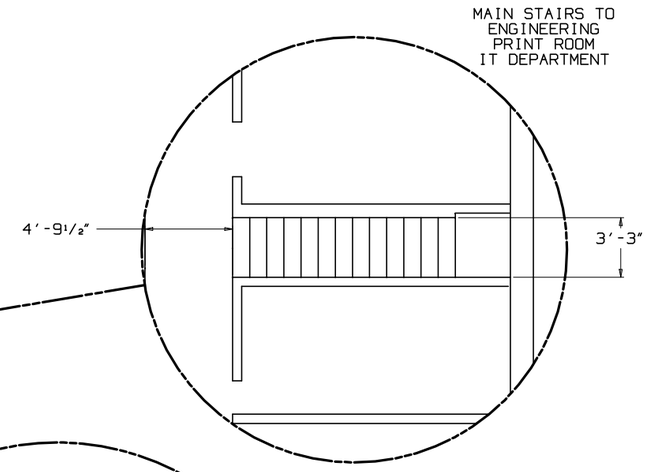

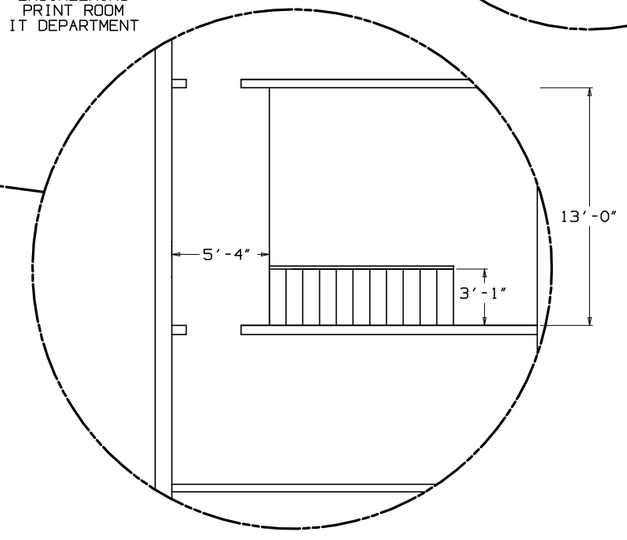

1. ADDED ALL POINTS OF EGRESS / INGRESS TO SECOND LEVEL. T.SZ. 6/17/2016

CONTROLLED POWER COMPANY
1955 STEPHENSON HWY. TROY,MI 48083

SITE PLAN

STAIRWELL FOR STAIRLIFT DETAIL

DRAWN T.SZWAST	DATE 5/5/2016
CHECKED .	DATE
SHEET 1	OF 1
SCALE .003=1	NO. CPCALLMAIN

ENGINEERING

ENGINEERING

EXIT

EXIT

EXIT